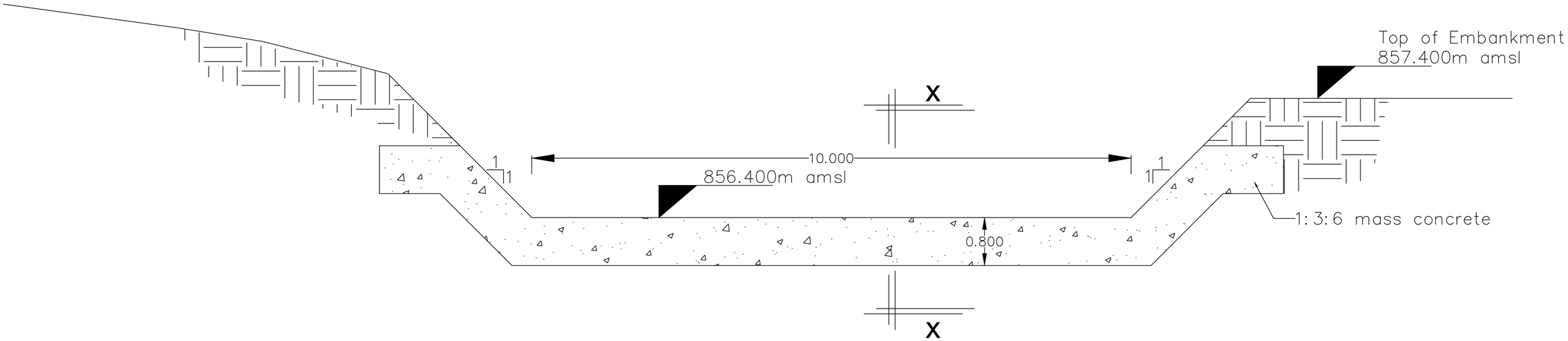

SPILLWAY CONCRETE SILL
(Scale: 1:40)

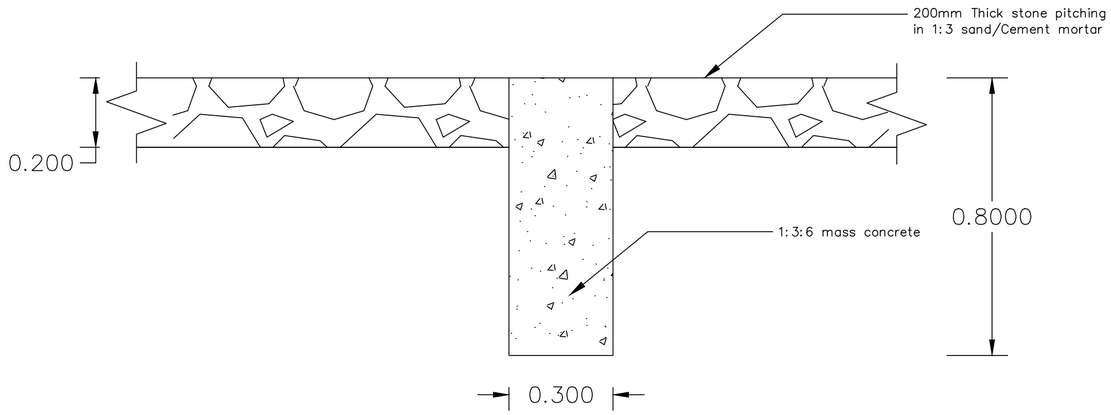

SECTION X-X
SPILLWAY CONCRETE SILL
(Scale: 1:10)

R E V I S I O N	
DATE	DESCRIPTION

REFERENCE DRAWINGS	
DRG. No.	DESCRIPTION

Kitui South Sub County

KAVETA EARTHDAM
CONSTRUCTION

Sheet 2 of 4

SCALE: 1:750

FIGURED DIMENSIONS ONLY TO BE TAKEN FROM THIS DRAWING

SURVEYED BY	Mulwa/Kamwilwa	DATE: Jan 2020
DIGITIZED BY	M. M. Mulwa	DATE: Jan 2020
CHECKED BY		
DESIGNED BY	M. M. Mulwa	DATE: Jan 2020
CHECKED BY		